MaxiLINK Wiring illustration

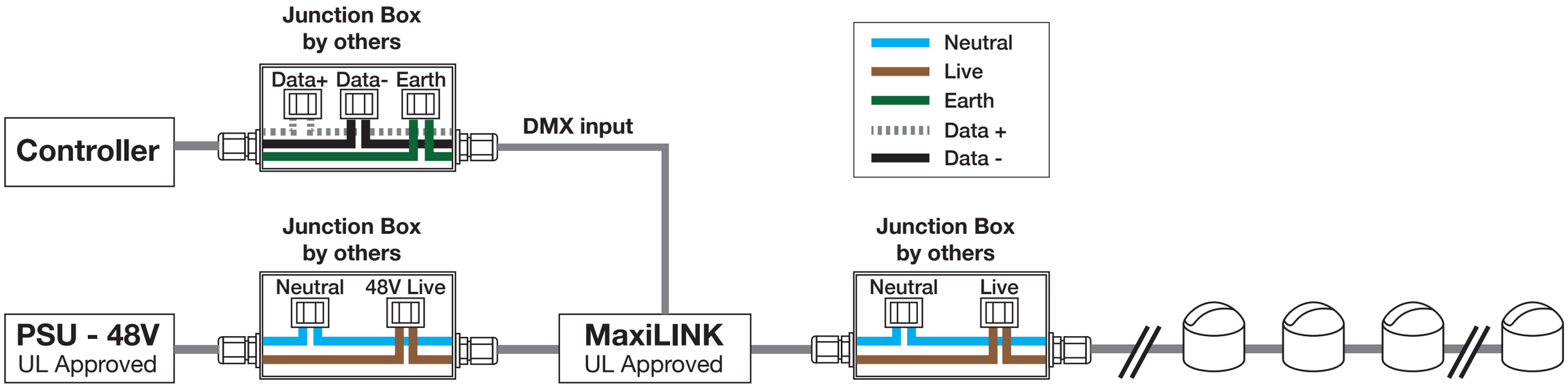

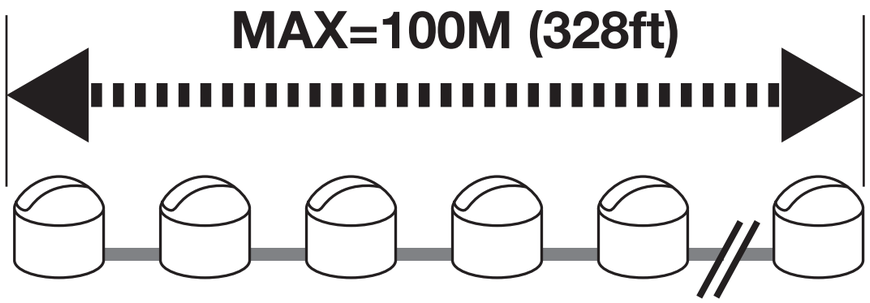

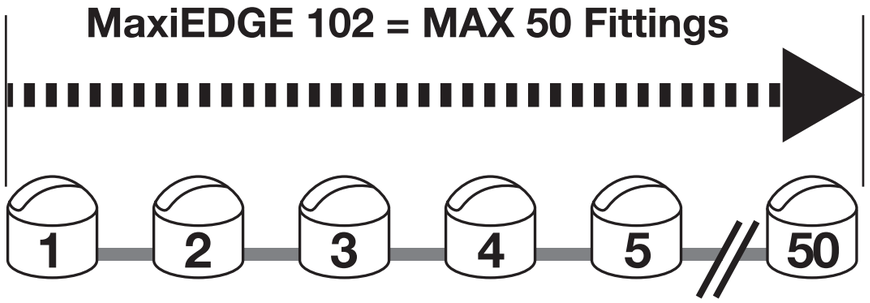

KEY

Symbol	Description

Rev	Date	Description	By	
1.0	8/1/18	MaxiLED Wiring using J. Box	CL	

Project Title:
MaxiLED Wiring using Junction box

Scale @:
NOT TO SCALE

Drawing Title:

Drawn	Checked	Date	Issue Date
CL		8 Jan 2018	

Drawing Number:	Revision:
1.0	1.0